PRN No. RBT23ET056	Total No. of Questions: 06

QP Code:

JSPM's
Rajarshi Shahu College of Engineering, Tathawade, Pune- 411033
(An autonomous institute affiliated to Savitribai Phule Pune University)

Examination: Mid Semester Examinations (MSE)

Semester: I **Academic Year: 2023-24**

Class: F. Y. B. Tech. (All Programs)
Department: Engineering Sciences and Humanities

Subject Code: -CE1201 **Subject Name and pattern: ENGINEERING MECHANICS 2023**

Duration: 1 Hour 15 Minutes **Max. Marks: 30 Marks**

Instructions to the Candidates
1. Solve Q.1or Q.2, Q.3 or Q.4 and Q.5 or Q.6.
2. Assume suitable and necessary data wherever required.
3. Neat diagram must be drawn wherever necessary.

Q. No.			Marks	BL	CO
1	a	Determine the resultant of forces tangent to the circle of radius 2 m as shown in below figure. Determine its location with respect to point 'O'. Also find out direction of resultant force.	5	BL2	CO1

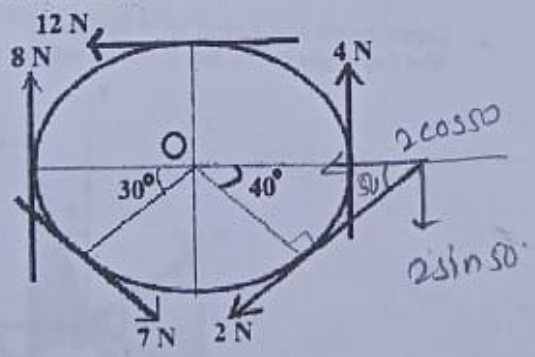

	b	Determine the magnitude and direction of resultant force for following force system.	5	BL2	CO1

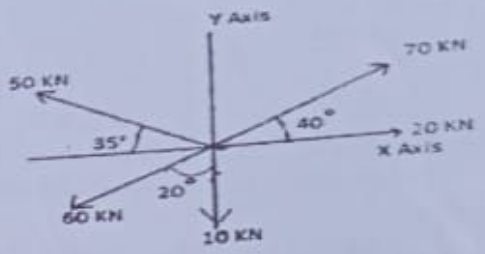

OR

2 a A system of force acting on a bell crank as shown. Determine the magnitude, direction and point of application of resultant with respect to point 'O'. 5 BL2 CO1

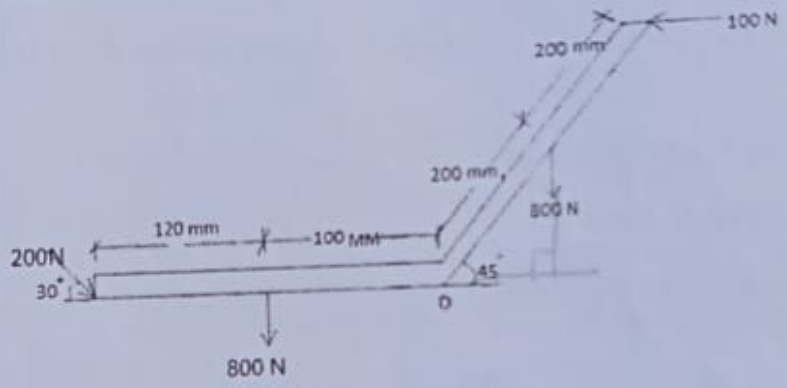

b The angle between the two forces of magnitude 20 N and 15 N is 60 degrees, the 20 N force being horizontal. Determine the resultant in magnitude and direction if the forces are pull. 5 BL2 CO1

P=20 Q=15 θ=60

3 a Determine the components of 14 KN and 16 KN forces as shown in figure. Also find angles θx , θy and θz with co-ordinate axis. 5 BL2 CO2

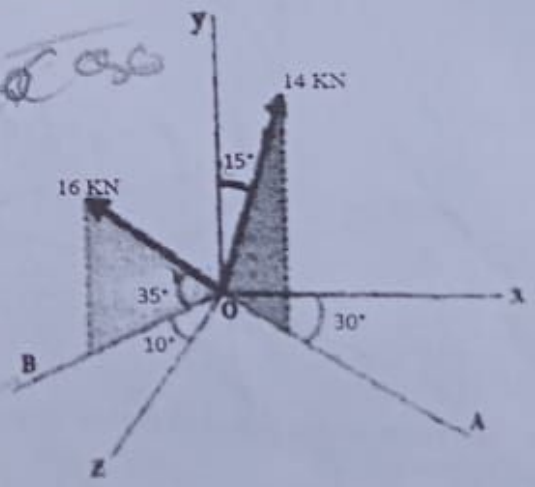

b Determine the centroid of thin wire bend in the shape of 'W' as shown in below figure having 3mm length of all members. 5 BL2 CO2

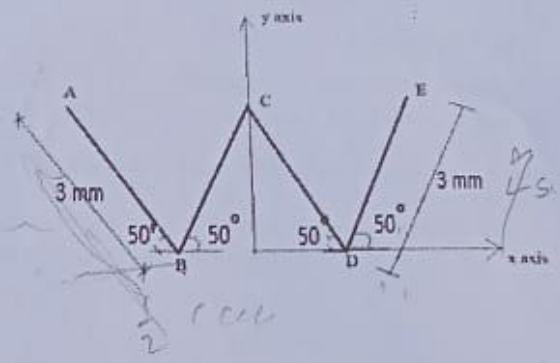

OR

4 a Determine the centroid of following composite section by removing the shaded circular part from section. 5 BL2 CO2

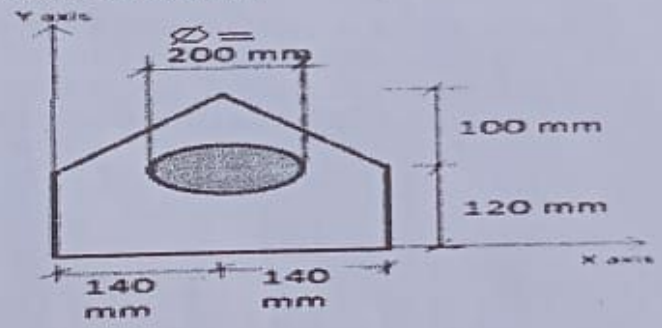

b Find out the moment of inertia of L section shown in fig. about Vertical Centroidal axis Iyy. 5 BL3 CO2

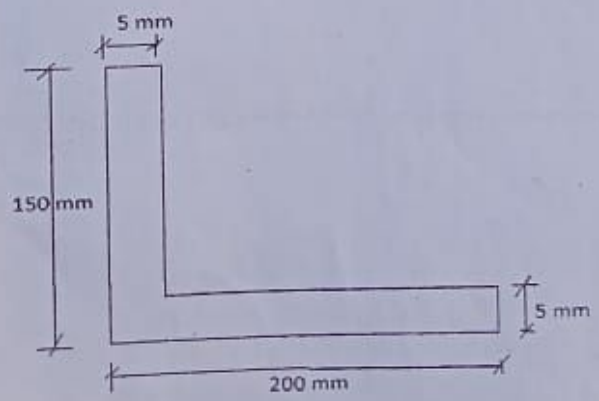

5 a A vehicle travels on straight line such that its position $X=3t^5-7t^3+15$, where X is in 'meter' and time is in 'second'.

Determine -

a) Time when velocity is zero(v=0) 5 BL2 CO3

b) Minimum speed reached by particle

c) Distance travelled in 2 second

b A projectile is fired with a velocity 50m/s on horizontal plane. find its time of flight in following case-

a) Its maximum height is 4 times horizontal range. 5 BL2 CO

b) Its maximum height is half of horizontal range.

OR

6 a A stone has fallen 14m after being dropped from the top of a tower, another stone is dropped from a point 24 m below the top of a tower. If both stones reach ground together. Find Height of tower. 5 BL2 CO

b At any instant horizontal position of balloon is shown determine-

1)The distance of the balloon from A at 3 sec

2)The magnitude and direction of velocity at 3 sec

3)The magnitude and direction of acceleration at 3 sec

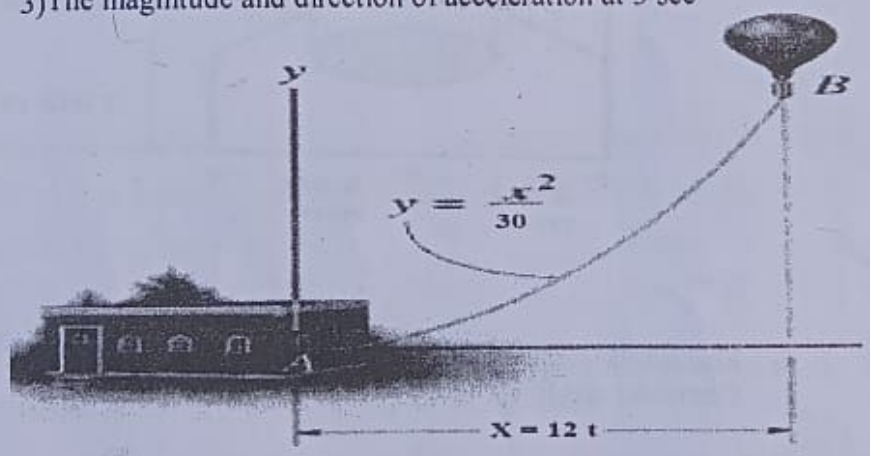

5 BL2 C

**********BEST of LUCK**********

Qusing